NOTES

1. ALL DIMENSIONS ARE IN MILLIMETERS (MM) UNLESS NOTED OTHERWISE.
2. THE MINIMUM DEPTH OF COVER FROM THE FINISHED GROUND LEVEL TO THE EXTERNAL CROWN OF THE PIPE SHALL BE 750 mm FOR SERVICE CONNECTIONS , 900 mm FOR WATER MAINS . GREATER DEPTHS OF COVER AND / OR PIPE STRENGTH AND / OR A HIGHER CLASS OF BEDDING MATERIAL MAY BE REQUIRED WHERE HIGH TRAFFIC LOADING IS ANTICIPATED . THE MAXIMUM COVER SHOULD NOT EXCEED 1200 mm WHERE PRACTICABLE .
3. CLAUSE 808 MATERIAL IN ACCORDANCE WITH THE TII SPECIFICATION FOR ROAD WORKS IS TO BE USED AS BACKFILL MATERIAL WHERE THE WATER MAIN IS LOCATED IN ROADS FOOTPATHS OR WHEN THE NEAREST PART OF THE TRENCH IS WITHIN 1 m OF THE PAVED EDGE OF THE ROADWAY . CLAUSE 808 IS TO BE COMPACTED AS PER CLAUSE 802 OF THE TII SPECIFICATION FOR ROAD WORKS .
4. SELECTED EXCAVATED MATERIAL MAY BE USED IN GREEN - FIELD AREAS ABOVE GRANULAR PIPE SURROUND MATERIAL SUBJECT TO THE APPROVAL OF THE EMPLOYERS REPRESENTATIVE.
5. PIPE BEDDING SHALL COMPLY WITH WIS 4-08-02 AND IGN 4-08-01 GRANULAR MATERIAL SHALL BE 14 mm TO 5 mm GRADED AGGREGATE OR 10 mm SINGLE SIZED AGGREGATE TO IS EN 13242
6. IN SOFT GROUND CONDITIONS (CBR < 5) THE MATERIAL SHOULD BE EXCAVATED OUT AND DISPOSED OF IN ACCORDANCE WITH THE WASTE MANAGEMENT ACT AND CLAUSE 808 MATERIAL IN ACCORDANCE WITH THE NATIONAL ROADS AUTHORITY SPECIFICATION FOR ROAD WORKS SHALL REPLACE THE EXCAVATED MATERIAL. WRAPPED IN GEO - TEXTILE WRAPPING . ALTERNATIVELY , SPECIAL PIPE SUPPORT ARRANGEMENTS INCLUDING PILING ETC. MAY BE REQUIRED WHERE THE DEPTH OF SOFT MATERIAL IS EXCESSIVE . SUCH ARRANGEMENTS SHALL BE SUBJECT TO ASSESSMENT BY EMPLOYERS REPRESENTATIVE BEFORE ADVANCING WITH THE WORK .
7. PIPES SHALL NOT BE SUPPORTED ON STONES OR ROCKS , OR ANY HARD OBJECT AT ANY POINT ALONG THE TRENCH . ROCK SHALL BE EXCAVATED TO A DEPTH OF 150 mm BELOW THE ACTUAL DEPTH OF THE TRENCH WITH THE VOID FILLED WITH CLAUSE 808 MATERIAL IN ACCORDANCE WITH THE TII SPECIFICATION FOR ROAD WORKS . THE GRANULAR MATERIAL SHALL BE LAID ABOVE THIS VOID BACKFILL MATERIAL.
8. SHOULD MINIMUM COVER NOT BE ACHIEVABLE, CONCRETE GRADE C8/10 SHALL BE USED AS BACKFILL MATERIAL.
9. MARKER TAPE TO BE 400 mm WIDE BLUE POLYETHYLENE MATERIAL IN ACCORDANCE WITH EN 12163 . PLASTIC PIPES SHALL HAVE WARNING TAPE INCORPORATED A REINFORCED BAND BRACING WIRE . SERVICE PIPES SHALL HAVE 200 mm WIDE MESH TAPE . MARKER TAPE TO BE LAID AT TOP OF PIPE BEDDING LAYER .
10. TRENCH WIDTHS FOR PIPE SIZES <= 80 mm MAY BE < 500 mm , SUBJECT TO CONSIDERATION BEING GIVEN TO THE TRENCH DEPTH , HEALTH & SAFETY & CONSTRUCTION ACCESS REQUIREMENTS .

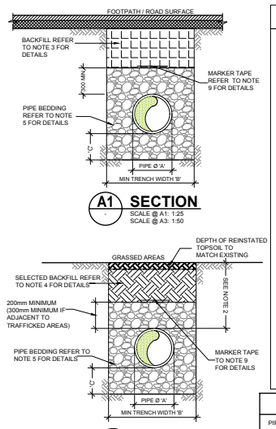

TABLE A

PIPE DIAMETER 'A' (mm)	WIDTH OF TRENCH 'B' (mm)
≤ 80	SEE NOTE 10
100	500
150	600
200	600
250	750
300	750
350	750
400	900
450	900

PIPE DIAMETER 'A' (mm)	DEPTH OF BEDDING 'C' (mm)
< 200	150
> 250	200

A TYPICAL TRENCH BACKFILL & BEDDING DETAILS

NOTES

1. ALL DIMENSIONS ARE IN MILLIMETERS (MM) UNLESS NOTED OTHERWISE.
2. SLUICE VALVE CHAMBERS SHALL BE COVERED WITH APPROVED HEAVY DUTY METAL COVERS TO IS 261 OR BS 5834. COVER AND FRAME SHALL BE SUITABLE FOR ROAD AND TRAFFIC CONDITIONS AND IS SUBJECT TO THE APPROVAL OF IRISH WATER.
3. SLUICE VALVES SHALL BE RESILIENT SEATED AND SHALL COMPLY WITH BS 5163-1, BS 5163-2, EN 1074-1, 05 EN 1074-2, OR EQUIVALENT E.U SPECIFICATIONS.
4. ALL SLUICE VALVES SHALL BE ANTI-CLOCKWISE CLOSING.
5. VALVE CHAMBER TO BE CONSTRUCTED OF PRECAST CONCRETE UNITS OR HIGH DENSITY BLOCKWORK, ALTERNATIVELY PROPRIETARY PREFABRICATED CHAMBER UNITS MAY ALSO BE USED, SUBJECT TO APPROVAL FROM IRISH WATER.
6. CONCRETE CHAMBERS SHALL BE SURROUNDED BY A MINIMUM OF 150mm COMPACTED CLAUSE 808 MATERIAL AS PER STD-W-13.
7. DUCTILE IRON PIPES AND FITTINGS TO BE IN ACCORDANCE WITH IS EN 545. PE PIPES AND FITTINGS TO BE IN ACCORDANCE WITH IS EN 12201:2011.
8. 200mm ALL AROUND. 100mm DEEP CONCRETE PLINTH WITH PROTECTIVE STAINLESS STEEL METAL BAND AROUND COVER IN GREEN AREAS.
9. TIE BOLTS (NOT SHOWN ON DRAWING), TO BE PROVIDED AS PER STANDARD DRAWING STD-W-28 AT ALL TEES, BENDS, TAPERS, DEAD ENDS AND PIPES AT STEEP SLOPES.
10. ANTI-CORROSION TAPE TO BE PROVIDED AROUND BURIED FLANGES.
11. ALL CONCRETE TO BE IN ACCORDANCE WITH IS EN 206.

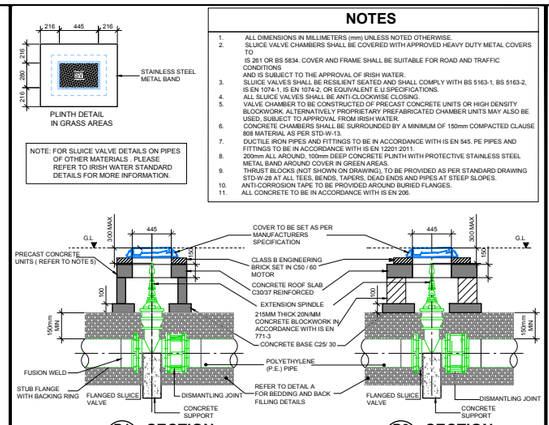

B TYPICAL SLUICE VALVE DETAILS FOR A POLYETHYLENE (PE) PIPE

NOTES

1. ALL DIMENSIONS IN MILLIMETERS (MM) UNLESS NOTED OTHERWISE.
2. HYDRANT CHAMBERS SHALL BE COVERED WITH APPROVED HEAVY DUTY METAL COVERS TO IS 261 AND BS 5834 COVER AND FRAME SHALL BE SUITABLE FOR ROAD AND TRAFFIC CONDITIONS AND IS SUBJECT TO THE APPROVAL OF EMPLOYER REPRESENTATIVE.
3. ALL HYDRANTS, SURFACE BOX FRAMES & COVERS SHALL COMPLY WITH THE RELEVANT PROVISIONS OF IS EN 14339, IS EN 1074-6 & BS 750. FIRE HYDRANTS SHALL BE TYPE 2. THE HYDRANT INLET SHALL BE 80MM DIAMETER WITH PN16.
4. ALL HYDRANTS SHALL BE CLOCKWISE CLOSING.
5. HYDRANT CHAMBER TO BE CONSTRUCTED OF PRECAST CONCRETE UNITS OR HIGH DENSITY BLOCKWORK, ALTERNATIVELY PROPRIETARY PREFABRICATED CHAMBER UNITS MAY ALSO BE USED. SUBJECT TO APPROVAL FROM THE EMPLOYER REPRESENTATIVE.
6. CONCRETE CHAMBERS SHALL BE SURROUNDED BY A MINIMUM OF 150MM COMPACTED CLAUSE 808 MATERIAL.
7. DUCTILE IRON PIPES AND FITTINGS TO BE IN ACCORDANCE WITH IS EN 545
8. 200MM ALL AROUND 100MM DEEP CONCRETE PLINTH WITH PROTECTIVE STAINLESS STEEL METAL BAND AROUND COVERS IN GREEN AREAS.
9. THRUST BLOCKS TO BE PROVIDED AS PER DETAIL F AT ALL TEES, BENDS, TAPERS, DEAD ENDS AND PIPES AT STEEP SLOPES.
10. ANTI-CORROSION TAPE TO BE PROVIDED AROUND BURIED FLANGES.
11. ALL CONCRETE TO BE IN ACCORDANCE WITH IS EN 206.

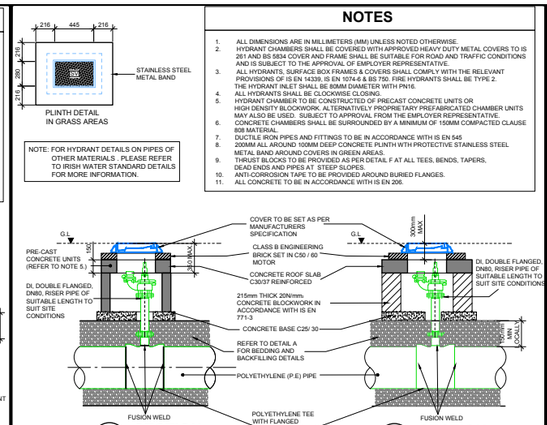

C TYPICAL ON-LINE HYDRANT DETAILS FOR A POLYETHYLENE (PE) PIPE

NOTES

1. ALL DIMENSIONS IN MILLIMETRES (mm) UNLESS NOTED OTHERWISE.
2. AIR VALVE CHAMBERS SHALL BE COVERED WITH APPROVED VENTILATED HEAVY DUTY METAL COVERS TO IS EN 124 RATING D400. COVER AND FRAME SHALL BE SUITABLE FOR ROAD AND TRAFFIC CONDITIONS AND IS SUBJECT TO THE APPROVAL OF THE EMPLOYER REPRESENTATIVE
3. AIR VALVES SHALL COMPLY WITH THE REQUIREMENTS OF IS EN 1074-4. AIR VALVES SHALL BE DOUBLE ORIFICE TYPE AND SHALL INCLUDE AN ISOLATING VALVE. THE ISOLATING VALVE SHALL BE A GATE VALVE CONFORMING TO IS EN 1074-2 & SHALL BE OF A BOLTLESS BONNET DESIGN.
4. THE AIR VALVES SHALL HAVE BODIES AND COVERS OF CAST IRON TO BS EN 1563 WITH FLANGES DRILLED TO PN 16 IN ACCORDANCE WITH BS EN 1092. EACH VALVE SHALL HAVE A LARGE AND A SMALL AIR ESCAPE ORIFICE WITH AN ISOLATING VALVE.
5. SERVICE CONNECTIONS SHALL NOT BE PROVIDED WITHIN 2m OF THE AIR VALVE LOCATION.
6. AIR VALVE CHAMBERS TO BE OF PRECAST CONCRETE UNITS OR HIGH DENSITY BLOCKWORK, ALTERNATIVE PROPRIETARY PREFABRICATED CHAMBER UNITS MAY ALSO BE USED, SUBJECT TO APPROVAL FROM THE EMPLOYER REPRESENTATIVE.
7. PRECAST CONCRETE CHAMBERS SHALL BE SURROUNDED BY A MINIMUM OF 150mm COMPACTED CLAUSE 808 MATERIAL.
8. DUCTILE IRON PIPES AND FITTINGS TO BE IN ACCORDANCE WITH IS EN 545.
9. 200mm ALL AROUND. 100mm DEEP CONCRETE PLINTH WITH PROTECTIVE STAINLESS STEEL METAL BAND AROUND COVERS IN GREEN AREAS.
10. THRUST BLOCKS TO BE PROVIDED AS PER DETAIL F AT ALL TEES, BENDS, TAPERS, DEAD ENDS AND PIPES AT STEEP SLOPES
11. ANTI CORROSION TAPE TO BE PROVIDED AROUND BURIED FLANGES.
12. THE LOCATION OF THE AIR VALVE SHALL BE THE SUBJECT OF PARTICULAR AGREEMENT WITH THE EMPLOYER REPRESENTATIVE TO ENSURE THAT THE RISK OF CONTAMINATION THROUGH THE VALVE IS ELIMINATED.
13. ALL CONCRETE TO BE IN ACCORDANCE WITH IS EN 206.

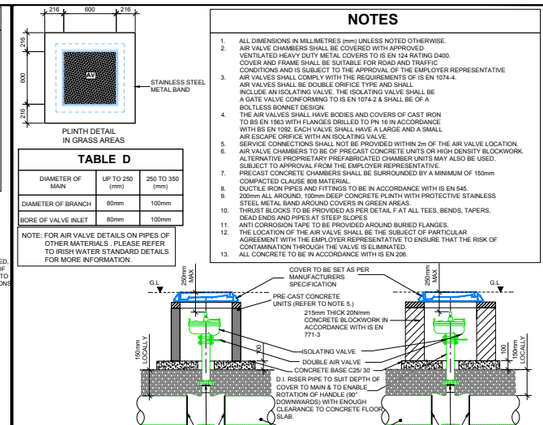

D TYPICAL ON-LINE AIR VALVE DETAILS FOR A POLYETHYLENE (PE) PIPE

NOTES

1. THIS DRAWING IS TO BE READ IN CONJUNCTION WITH ALL ENGINEERS & ARCHITECTS DRAWINGS FIGURED DIMENSIONS ONLY (NOT SCALING) TO BE USED. WHERE A CONFLICT OF INFORMATION EXISTS OR IF IN ANY DOUBT - ASK.
2. CONSULTANTS TO BE INFORMED IMMEDIATELY OF ANY DISCREPANCIES BEFORE WORK PROCEEDS.

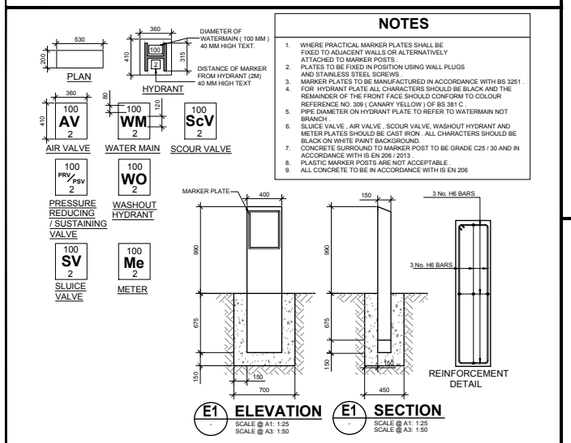

NOTES

1. WHERE PRACTICAL MARKER PLATES SHALL BE FIXED TO ADJACENT WALLS OR ALTERNATIVELY ATTACHED TO MARKER POSTS .
2. PLATES TO BE FIXED IN POSITION USING WALL PLUGS AND STAINLESS STEEL SCREWS .
3. MARKER PLATES TO BE MANUFACTURED IN ACCORDANCE WITH BS 3251 .
4. FOR HYDRANT PLATE ALL CHARACTERS SHOULD BE BLACK AND THE REMAINDER OF THE FRONT FACE SHOULD CONFORM TO COLOUR REFERENCE NO. 309 (CANARY YELLOW) OF BS 381 C .
5. PIPE DIAMETER ON HYDRANT PLATE TO REFER TO WATERMAIN NOT BRANCH .
6. SLUICE VALVE , AIR VALVE , SCOUR VALVE, WASHOUT HYDRANT AND METER PLATES SHOULD BE CAST IRON . ALL CHARACTERS SHOULD BE BLACK ON WHITE PAINT BACKGROUND.
7. CONCRETE SURROUND TO MARKER POST TO BE GRADE C25 / 30 AND IN ACCORDANCE WITH IS EN 206 / 2013 .
8. PLASTIC MARKER POSTS ARE NOT ACCEPTABLE .
9. ALL CONCRETE TO BE IN ACCORDANCE WITH IS EN 206

E TYPICAL MARKER POST / PLATE DETAILS

NOTES

1. ALL DIMENSION ARE IN MILLIMETERS (MM) UNLESS NOTED OTHERWISE
2. CONCRETE THRUST BLOCKS (ANCHORAGE) SHALL BE POSITIONED SYMMETRICALLY WITH RESPECT TO THE CONNECTING PIPE & BENDS .
3. TRENCH DIMENSIONS : REFER TO DETAIL A
4. THRUST BLOCKS SHALL BEAR ON UNDISTURBED SOIL . IF FOR ANY REASON THEY CANNOT THEN THE CONTRACTOR SHALL NOTIFY THE EMPLOYER REPRESENTATIVE IMMEDIATELY WITH A PROPOSED SOLUTION .
5. THRUST BLOCK REINFORCEMENT REQUIRE SPECIFIC DESIGN .
6. FOR TEST PRESSURES GREATER THAN 18 BAR , THRUST BLOCK DESIGN IS TO BE SUBMITTED TO IRISH WATER FOR APPROVAL .
7. THRUST BLOCKS ARE DESIGNED FOR AN AVERAGE BEARING PRESSURE OF 100 KN/M (TYPICAL FOR SOFT CLAY) FOR OTHER CONDITIONS . ACTUAL DIMENSIONS MAY BE ALTERED ON INSTRUCTIONS FROM THE EMPLOYER REPRESENTATIVE.
8. CONCRETE IN THRUST BLOCKS SHALL BE GRADE C20/25
9. COMPRESSIBLE FILLER FOR CONCRETE PROTECTION TO BE IN ACCORDANCE WITH BS EN 622 - 1 AND BS EN 622 - 4 . BITUMINOUS MATERIAL SHALL NOT BE PUT IN CONTACT WITH PLASTIC PIPES . THE THICKNESS OF COMPRESSIBLE FILLER FOR MAINS < 400 MM IN DIAMETER IS TO BE 18 MM .
10. CONCRETE THRUST BLOCKS FOR POLYETHYLENE PIPE TO COMPLY WITH THE MANUFACTURES REQUIREMENTS .
11. POLYETHYLENE PIPE SHALL BE WRAPPED IN PLASTIC SHEETING HAVING A COMPOSITION IN ACCORDANCE WITH BS 6076 BEFORE BEING CAST INTO CONCRETE .
12. ALL CONCRETE TO BE IN ACCORDANCE WITH IS EN 206

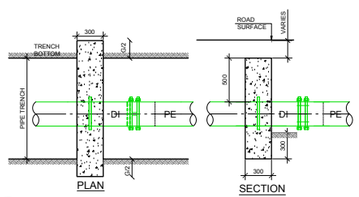

F7 THRUST BLOCK FOR DUCTILE IRON TO POLETHLENE CHANGE OVER

THRUST BLOCK DIMENSIONS

	< 12 BAR TEST PRESSURE									
NOM DIA (mm)	DIMENSIONS									
	A	B	C	D	E	F	G	H	J	K
100	600	330	160	80	200	350	390	700	600	400
150	950	510	260	130	225	450	660	900	750	600
200	1150	600	310	160	300	650	790	1050	900	700
250	1350	750	380	200	300	800	970	1200	1000	750
300	1580	850	450	220	320	950	1110	1300	1100	850
350	2100	1150	570	290	450	1000	1450	1550	1200	900
400	2350	1400	700	350	500	1050	1800	1700	1250	1000
450	3000	1630	830	420	680	1100	2130	1800	1450	1150
500	3590	1950	990	500	800	1200	2540	1950	1600	1250
600	4100	2200	1120	570	850	1400	2880	2100	1700	1300

THRUST BLOCK DIMENSIONS

	12 BAR TO 15 BAR TEST PRESSURE									
NOM DIA (mm)	DIMENSIONS									
	A	B	C	D	E	F	G	H	J	K
100	700	380	180	100	200	350	510	750	600	400
150	1135	620	320	160	225	450	760	950	750	600
200	1400	750	380	190	300	650	980	1150	950	700
250	1730	940	480	240	320	800	1210	1350	1050	850
300	2090	1130	580	300	380	950	1480	1500	1200	950
350	2600	1410	720	360	500	1050	1840	1700	1350	1050
400	2980	1610	820	420	750	1200	2110	1850	1500	1150
450	3400	1840	940	470	900	1300	2330	2000	1600	1250
500	4090	2210	1130	570	1000	1400	2890	2200	1750	1350
600	5010*	2710*	1380	700	1000	1500	3550*	2350	1900	1500

THRUST BLOCK DIMENSIONS

	15 BAR TO 18 BAR TEST PRESSURE									
NOM DIA (mm)	DIMENSIONS									
	A	B	C	D	E	F	G	H	J	K
100	750	400	205	100	220	400	530	800	650	400
150	1250	700	350	180	250	500	890	1000	850	650
200	1650	890	450	230	320	700	1170	1250	1000	800
250	1960	1060	540	270	350	900	1370	1450	1150	900
300	2300	1200	640	320	500	1100	1630	1650	1300	1050
350	2930	1580	830	410	750	1200	2070	1850	1500	1150
400	3510	1900	970	190*	1000	1300	2490	2000	1600	1200
450	3810	2270	1160	580	1000	1350	2970	2150	1700	1350
500	4340*	2380	1210	610	1000	1400	3700	2250	1750	1400
600	6370*	3450*	1760	890	1000	1500	4500*	2400	2050	1650

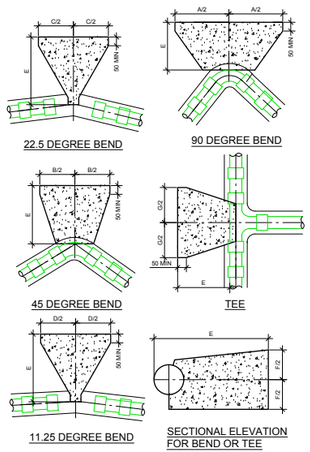

F1 HORIZONTAL BENDS

SCALE 1:25

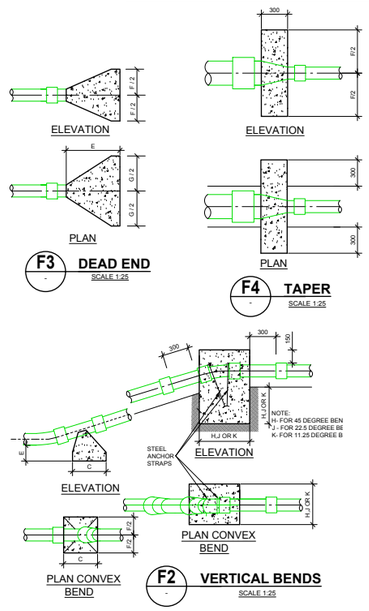

F2 VERTICAL BENDS

SCALE 1:25

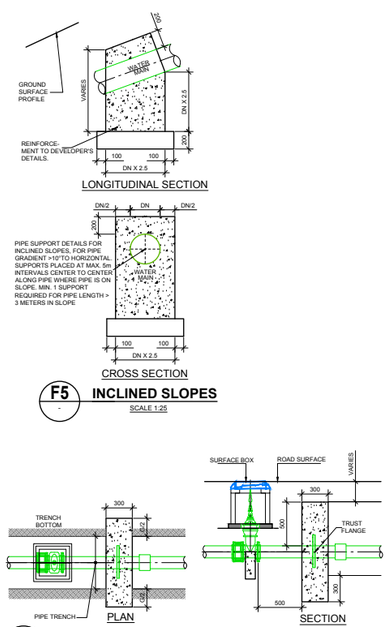

F5 INCLINED SLOPES

SCALE 1:25

F6 THRUST BLOCK FOR SLUICE VALE/GATE VALVE

SCALE 1:25

F TYPICAL WATERMAINTHRUST AND SUPPORT BLOCK DETAILS

ISSUE	DATE	DESCRIPTION	DRWN	CHKD	P.E.	P.D.
PL5	26.11.19	ISSUED FOR PLANNING	MF	DB	JB	JB
P2	10.10.19	ISSUED FOR INFORMATION	MF	DB	JB	JB
PL4	06.06.19	ISSUED FOR PLANNING	MF	DB	JB	JB
P1	29.05.19	ISSUED FOR COMMENT	MF	DB	JB	JB
PL3	24.04.19	ISSUED FOR PLANNING	MF	DB	JB	JB
PL2	03.04.19	ISSUED FOR PLANNING	MF	DB	JB	JB
PL1	20.03.19	ISSUED FOR PLANNING	MF	DB	JB	JB

DRAWING STAGE: **PLANNING**

BARRETT MAHONY
Dublin Office: Sandwith House, 52-54 Lower Sandwith Street, Dublin 2, Ireland. Tel. (01) 677 3200 Fax (01) 677 2164
London Office: 12 Mill Street, London SE1 2AY, United Kingdom Tel. (0044) 084 5413 2722
Consulting Engineers, Civil . Structural . Project Management.E-mail: bmce@bmce.ie Web: www.bmce.ie

CLIENT: **ATLAS GP LTD**

PROJECT TITLE: **CLAREMONT PROJECT** — BM PROJECT No. **18386**

MODEL REFERENCE — MODEL REV. — SUITABILITY

DRAWING TITLE: **WATERMAIN DETAILS**

DRAWING No. **PPT-BMD-XX-ZZ-DR-C-1220** — ISSUE **PL5**